前　言

Preface

尊敬的用户：**The reverent respectful user**:

感谢您选用北京振冲工程机械有限公司生产的高性能振冲器设备，本《北京振冲工程机械有限公司振冲器设备使用手册》（以下简称《使用手册》）为您提供振冲器设备的结构、工作原理、安装使用、维护保养，故障及排除等相关细则及注意事项。

Thank you for selecting high-performance vibrator equipment produced by Beijing Vibroflotation Engineering Machinery Co., Ltd, this “instruction manual of vibrator equipment of Beijing Vibroflotation Engineering Machinery Co., Ltd.”(Hereinafter referred to as “instruction manual”) will provide you with related rules and announcements of vibrator equipment like the structure, operation principle, installation and use, maintenance, fault and elimination and so on.

为了充分发挥振冲器设备的性能，便于用户使用，请仔细阅读本《使用手册》。按照本《使用手册》的规定正确使用，以减少故障发生，延长使用寿命。

With the purpose of giving full play to the performance of vibrator equipment and being convenient for the user using, please read carefully this “instruction manual” and operate the vibrator properly in accordance with this instruction manual so as to reduce fault occuring

and prolong service life.

本《使用手册》随产品发送,请妥善保管,已备今后对振冲器进行检修维护时使用。

This instruction manual is delivered together with the vibrator equipment, please safekeeping it for future use of repairing and maintenance.

由于致力于对产品不断改善,本公司所提供的资料如有变动,恕不另行通知。用户可随时登陆本公司网站(www.chinazcq.com)查询相关信息。

Due to dedicate to continuous improvement of our products, the user can at any time log in our website (www.chianzcq.com) to inquire relevant information without notice when the data provided by our company has change.

若英文译本与中文有异，以中文版本为准。

Should there be any inconsistencies between Chinese and English versions, the Chinese version shall prevail.

目　　录

Catalogue

一、概述 Overview 5
1、 用途和特点 Usage and feature 5
2、 振冲器性能和技术参数 Performance and technical parameter of the vibrator.....7
二、振冲器的原理和结构 Principle and structure of the vibrator 10
1、 振冲器的原理 Principle of the vibrator 10
2、 振冲器的结构 Structure of the vibrator 10
三、振冲器配套机具 Supporting machine of the vibrator 12
四、振冲器组装及使用 Assembly and use of the vibrator 15
1、 组装 Assembly.....15
2、 使用 Usage.....18
五、振冲器维护与保养及故障排除 Maintenance and failure elimination of the vibrator.....25
1、 维护与保养 Maintenance 25
2、 故障与排除 Failure and elimination 27
六、电控柜使用说明 Instruction of the electric cabinet 30
1、概述 Overview.....30
2、 电控柜正常工作条件 Normal operating condition of the electric cabinet 30
3、 电控柜结构与特点 Structure and feature of the electric cabinet 31

4、 电控柜使用方法 Using method of the electric cabinet.....32

七、安全注意事项 Notes for safety.....36

1、安全需知 Safety instruction 36

2、设备操作 Device operation 37

2.1 设备操作人员要求 The requirement for device operator.....37

2.2 现场指挥人员 Commander in construction site.....38

2.3 危险区 Dangerous area.....39

2.4 保养工作 Maintenance.....40

八、运输安全原则 Safety principle of transportation 41

九、质量保证 Quality guarantee.....43

1、产品品质及保修内容 Quality and warranty content of the product.....43

2、产品保修范围 Warranty scope.....44

3、权利及免除责任事宜 Rights and issues exempted from liability 45

一、概述 Overview

1、用途和特点 Usage and feature

振冲器可应用于填料振冲桩和挤密振冲桩施工。振冲器在施工过程中,由动力装置(通常为电机或液压马达)驱动振动体内的偏心块做高速旋转,在水平方向产生强大的振动力,同时高压水通过水道由振冲器头部孔口射出,冲击土壤。振冲器水平振动和水冲作用后,通过加料(碎石,卵石,砂)挤密形成密实的桩体,同时也加密了周围介质,形成复合地基。振冲处理后的地层可以承受一定的动载荷,可提高地基承载力和相对密度以及抗液化能力。

The vibrator can be used in construction of packing vibration impact pile and compaction vibration impact pile. In construction process the eccentric block in vibrator makes high-speed rotation drove by power device (usually is electric motor or hydraulic motor) to produce strong vibration power in horizontal direction, all at once high pressure water spew out of the hole in vibrator head through the waterway to impact the soil. After horizontal vibration and water impact action the vibrator forms compaction pile by loading (gravel, pebble, sand) and compacting as well as compact ambient medium to form a composite foundation. The strata after vibration impact processing can bear a certain dynamic load, so as to improve bearing capacity of the foundation and relative density and capacity resistance to liquefaction.

振冲器适用于碎石土、砂土、粉土、黏性土、人工填土及湿陷性土等地基的加固及各类可液化土的加密和抗液化处理。对于

不排水抗剪强度小于 20kPa 的淤泥、淤泥质土及该类土的人工填土地基,应通过实验确定。目前振冲法已被广泛的应用于处理各种建筑物地基,如：大坝、道路、桥涵、大型火力发电厂、水力发电站、炼油厂、化工厂、工民建等地基中。振冲法加固地基,施工机具简单、操作方便、加固质量容易控制、施工速度快,加固时不需要钢材水泥,仅用碎石,卵石等当地材料,造价低,具有明显的经济优势。

The vibrator is suitable for foundation reinforcement of gravel soil, sand, silt, cohesive soil, artificial soil and collapsible soil as well as compaction and resisting liquefaction of various liquefiable soils. We should be determined by experiment for the un-drained shearing strength being less than 20 KPa like silt, silt soil and this kind artificial soil foundation. At present vibroflotation method has been widely used in processing all kinds of building foundation such as dam, road, bridge, large thermal power plant, hydropower station, oil refinery plant, chemical plant and civil engineering and so on. Vibroflotation method has the obvious economic advantage of compacting foundation because its construction machine and tool is simple and easy to operation, compaction quality is controlled easily, construction speed is fast and the compacting don’t need steel cement only adopt local materials like gravel and pebble and the cost is lower.

我公司生产的振冲器已经达到国内同行业领先水平,荣获多项国家专利。具有设计合理,性能稳定,穿透能力强,密封结构安全、可靠,使用周期长,便于施工现场维修等特点。目前振冲器已形成功率从 30kW 至 240kW, 转速从 960r/min 至 3000r/min 的系列产品,用户可根据不同地层选用不同规格型号的振冲器。均可满足国

内外施工需求。

The vibrator of our company has reached the domestic leading level and won several national patents with the feature of reasonable design, stable performance, strong penetration ability, dependable and safe seal structure, long life cycle and being easy to maintain construction site. Now the vibrator has formed a series of products of frequency from 30KW to 240KW and the rotating speed from 960r/min to 3000r/min and the user can select different specification vibrator on basis of different strata to meet construction requirement at home and abroad.

2、振冲器性能和技术参数 Performance and technical parameter of the vibrator

振冲器的基本性能参数如下：

Basic performance parameters are as follows:

(1)振冲器转速 Rotation speed：960-3000r/min

(2)振动力 Vibration power：130-320kN

(3)头部全振幅 Full amplitude in head：13-32mm

(4)水流量 Water flow：18-40m^3/h

(5)气流量 Gas flow:：100m^3/h

(6)振冲器总重 Total weight：1.2-2.5t

具体指标见表 1-1-电动振冲器技术参数。

The concrete indexes please see the table 1-1 technical parameters of electric vibrator

表 1-1 电动振冲器技术参数 Table 1-1 technical parameters of electric vibrator

规格型号 Specification	电机功率 kW electric power	额定电流 A Rated current	最大转速 r/min Max rotation speed	最大振幅 mm Max amplitude	振动力 Kn vibration power	质量 kg Weight	外径 mm Outer Diameter	长度 mm Length	工作桩径 mm work pile Diameter
BJV30E-325	30	58	1450-1800	13.5	130-200	1192	325	2480	600-800
BJV30E-377	30	58	1450-1800	20	150-230	1300	377	2300	700-900
BJV45E-325	45	88	1450-1800	13.5	130-200	1200	325	2550	600-800
BJV45E-377	45	88	1450-1800	20	150-230	1380	377	2400	800-1000
BJV55E-325	55	108	1450-1800	13.5	130-200	1240	325	2560	600-800
BJV55E-377	55	108	1450-1800	20	150-230	1560	377	2500	800-1000
BJV75E-325	75	148	1450-1800	13.5	130-200	1368	325	2700	600-800
BJV75E-426	75	148	1450	16	180	2018	426	2783	1000-1200
BJV75E-377L	75	148	1450	17.5	188	1828	377	3110	1000-1200
*BJV75E-377S	75	148	1450-1800	25	208-320	1740	377	2910	800-1000
BJV100E-325	100	195	1450-1800	13.3	130-200	1500	325	2710	600-800
BJV100E-426	100	195	1450	17.2	208	2073	426	2883	1000-1200
BJV100E-377L	100	195	1450-1800	19	180-276	1880	377	3215	800-1000
*BJV100E-377S	100	195	1450-1800	25	208-320	1820	377	2930	1000-1200
BJV130E-426	130	255	1450	17.2	208	2320	426	2963	1000-1200
BJV130E-377L	130	255	1450-1800	19	180-276	1900	377	3355	800-1000
*BJV130E-377S	130	255	1450-1800	25	208-320	1860	377	2950	1000-1200
BJV150E-426	150	290	1450	18.9	276	2516	426	3023	1000-1200
BJV150E-377L	150	290	1450-1800	19	180-276	2100	377	3445	800-1000
*BJV150E-377S	150	290	1450-1800	25	208-320	1900	377	2970	1000-1500
BJV180E-426	180	350	1450	18.9	276	2586	426	3100	1200-1500
BJV180E-377L	180	350	1450-1800	21	180-276	2140	377	3485	1000-1200
*BJV180E-377S	180	350	1450-1800	28	250-384	1980	377	3465	1000-1500
BJV240E-426L	240	460	1450	38	460	3210	426	3880	1500-2000
*BJV240E-426S	240	460	1450	52	660	3080	426	3860	2000-2500

✧ 以上参数仅供参考 The above parameters are only for reference

备注： Note:

标注*的产品我公司暂不对外销售，客户有需求可租赁使用。

The products marked with * for the time not being foreign sale, the customer can lease for use if needing.

我公司可根据用户要求加工指定振幅、振动力的振冲器。

Our company can process vibrator of customized amplitude and vibration power according to user’s requirement.

注意 Attention

施工使用的油品应尽可能选用可以分解的油品，以防止在油品渗漏的情况下长期的损坏环境，尤其是防止对地下水造成不良影响。

The used oil should as far as possible be chose the decomposable oil to escape from environment damage caused by oil leakage especially to prevent from adverse impact on groundwater.

二、振冲器的原理和结构 Principle and structure of the vibrator

1、 振冲器的原理 Principle of the vibrator

潜水电机通过联轴器带动振动体内的偏心块产生离心力,使整个振冲器产生水平振动。

The eccentric block in body of the vibrator is drove by submersible motor through coupler to produce centrifugal force and horizontal vibration for the whole vibrator.

2、 振冲器的结构 Structure of the vibrator

振冲器由潜水电机和振动体两大部分组成,如图 2-1 振冲器结构示意图所示:

The vibrator is composed of submersible motor and vibration body; please see the following picture 2-1 structure schematic program of the vibrator:

图 2-1　振冲器结构示意图

Picture2-1 Structure schematic program of the vibrator

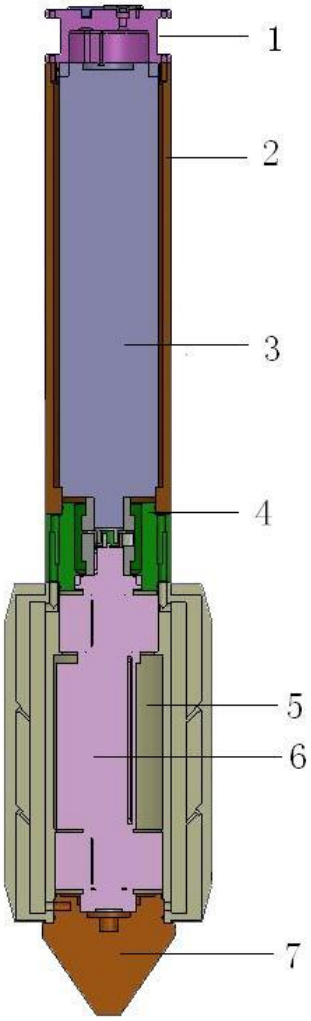

1-电机压盖 Motor gland

2-电机水套 Motor water jacket

3-振冲电机 Vibrator motor

4-连接法兰 Connecting flange

5-偏心块 Eccentric block

6-振冲主轴 Vibrator spindle

7-振冲头 Vibrator head

三、振冲器配套机具 Supporting machine of the vibrator

配套机具主要由吊头及导杆、减震器、电控柜、电缆和高压胶管、清水泵、水箱、液位仪、起重机组成。应根据施工情况合理选用配套机具。

Supporting machine mostly is composed by hanging head and guide rod, shock absorber, electric cabinet, cable, high pressure hose, clear water pump, water tank, level instrument and crane, should select the supporting machine reasonably in accordance with construction status.

1、吊头及导杆：Hanging head and guide rod:

吊头、导杆用来连接起吊振冲器,导杆长度由桩深决定。

Hanging head and guide rod is used for connecting the lifting vibrator and the length of guide rod depends on the depth of pile.

2、减震器：Shock absorber:

保证振冲器在工作状态中独立水平震动,减少对上部导杆和吊装机构的振动冲击。

Ensure independent horizontal vibration of the vibrator in the status of working and reduce vibration shock to the upper guide rod and lifting mechanism.

3、电控柜：Electric cabinet:

电控柜电源采用 380V 交流电压,频率 50Hz、60Hz(需定制)自

耦降压启动器,以减少电动机启动时电网电压的影响。电控柜的工作环境温度不高于+50℃,不低于-20℃,相对湿度小于等于 80%,工作时应平稳放置,要有防雨措施并保持通风良好。

The power of electric cabinet is adopted for coupling decompression starter of 380V ac voltage and 50HZ (needed to customize) to reduce influence of network voltage when starting the motor. Working ambient temperature of the electric cabinet should not be higher than +50℃ and not be less than -20℃ and the relative humidity is not more than 80%, the electric cabinet must be placed smoothly and be equipped with rain-proof measure and be kept well ventilated.

4、电缆和高压胶管：Cable and high pressure hose:

电缆及高压胶管穿过导杆与相应部件相联,起到保证振冲器电机用电及施工用水的作用。

The cable and high pressure hose both are connected with related components through guide rod to guarantee the electricity of vibrator motor and water of the construction.

5、清水泵：Clear water pump:

将水箱中的水高压打入振冲器体内,并从振冲器头部冲出,冲击孔口。

Be used to high-pressure pump the water in water tank into the vibrator and out of the head to impacting the orifice of the vibrator.

6、水箱：Water tank:

储存水源,以备充足水量。

Be used to Store water to prepare for sufficient water.

7、液位仪：Level instrument:

在水箱内放置,水箱中的水位在远距离可传输到电控柜中,以自动控制水箱存水量。

Being placed in water tank, water level of the water tank can be transmitted remotely to the electric cabinet to control residual water automatically.

四、振冲器组装及使用 Assembly and use of the vibrator

1、 组装 Assembly

注意 Attention

在使用振冲器之前,要选择平坦的场地把相关配套设备安装在一起。

The vibrator should be assembled together with related supporting devices before using.

图 4-1 振冲器及配套设备安装图

Picture 4-1 Installation diagram of the vibrator and supporting devices

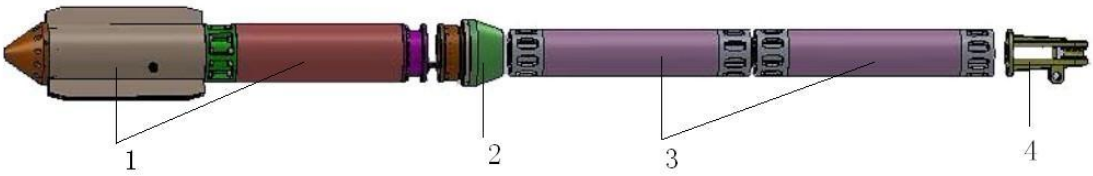

1-振冲器及电机 The vibrator and electric motor

2-减震器 Shock absorber

3-导杆(多根) Guide rod (many)

4-吊头 Handing head

- 把振冲器、减震器及导杆、吊头按顺序放好，用螺丝连接导杆、吊头及减震器。连接法兰与电机和振冲壳体连接处应用钢筋进行加固。

  Put the vibrator, shock absorber, guide rod and handing head away in order and connect the guide rod, handing head with shock absorber by screw. The connection of flange and electric motor and the joint of vibrator shell should be reinforced by steel bar.

- 把电缆及高压胶管穿过导杆与振冲器进行连接。

  Connect the cable and high pressure hose with the vibrator through guide rod.

- 在吊头上安装横拉杆，将电缆、高压胶管、防扭绳固定到横拉杆上。固定时对电缆、高压胶管做好保护，防止漏电、漏水情况发生，并将导杆内电缆及高压胶管拉直以防止与导杆内壁产生摩擦，造成过早损坏。

  Install the tie rod on handing head as well as fix the cable, high pressure hose and twisted prevention rope to the tie rod. When fixing should protect the cable and high pressure hose to avoid water and electricity leakage, at the same time straighten the cable and high pressure hose in guide rod to prevent from friction with inner wall of the guide rod and the damage untimely.

- 振冲器整体安装完成。振冲器及配套设备连接时，保证所有连接部位牢固。连接紧固螺丝时应采用对角加固。

  The whole installation of vibrator is finished. Ensure that all joints are fixed when connecting vibrator and supporting devices. Connecting the fastening screw should be adopted for diagonal reinforcement.

- 电工对电控柜内的电器元件、仪表进行检查，确认完好无损后将地线与电控柜底线连接。将网电电源或发电电源电缆从入线

口穿入电控柜,连接到绝缘板端子上。

Electrician connects earth wire with base line of electric cabinet after confirming the electric components and instruments in electric cabinet being in good repair, and then connects network power cable or power supply cable to the terminal of insulating board from the line mouth into electric cabinet.

- 电控柜输入电源连接完成后,开始连接输出电源。由电工把振冲器、清水泵、潜水泵、液位仪、泥浆泵及各照明线缆按相应标示连接到绝缘板端子上。

Start to connect output power after completing input power connecting of electric cabinet. The electrician connects vibrator, clear water pump, submersible bump, level instrument, mud pump and various lighting cable to the terminal of insulating board according to relevant indications.

2、 使用 Usage

图 4-2 振冲器施工示意图

Picture4-2 Construction schematic diagram of the vibrator

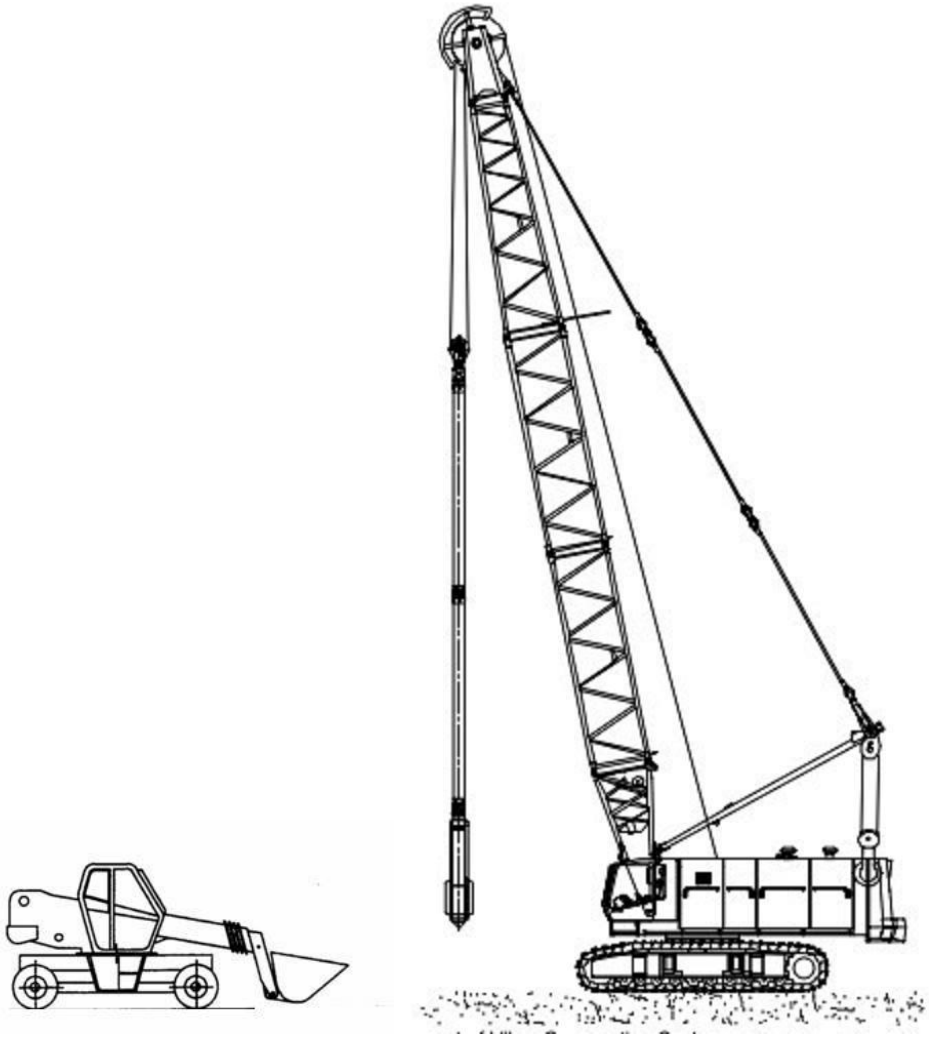

振冲器正式启动前,要进行试运行,确定工作状况正常,方可以使用。

The vibrator should be pilot run before being officially launched, ensuring the operational status being normal and can be used.

- 所有线缆连接完成后,启动输入电源。启动后电控柜控制面板电源指示灯亮起。(黄、绿、红三色)旋转面板上的换项开关,检查三项电压是否平稳、齐全。

  Enable input power after finishing connection of all cables and then indicator light of power is turned on in control panel of electric cabinet. (Yellow, green and red) rotate the transfer switch on panel to check whether three-phase voltage is smooth and complete or not.

- 电控柜三项电压测试正常后,振冲器及各配套设备开始测试。

  Start to test the vibrator and various supporting devices after passing the test to three-phase voltage of electric cabinet.

- 开始测试前,检查振冲器转换启动时间继电器及电流继电器。根据产品型号调整相应数值。没有外界影响的情况下,出厂前相应数值已调试适当。

  Before starting to test, check conversion start time of the vibrator, relay and current relay and adjust relevant values according to the type of products. Relevant values should have been adjusted properly before shipping in case of no external influence.

- 开启潜水泵开关,绿色指示灯亮起时,按照标示按下绿色按钮,红色指示灯亮时,潜水泵开始工作。观察液位仪敏感程度,达到设计水位后,潜水泵通过液位开关自动停止。

Turn on the switch of submersible pump, press down the green button in the light of the directions when the green indicator is lighting up and the submersible pump will start to operation when the red indicator light is lighting up. Observe sensitive degree of the level instrument, the submersible pump turns off automatically by liquid level switch after upping to designed level.

- 潜水泵启动正常后,开启清水泵开关,绿色指示灯亮起时按照标示按下绿色按钮,红色指示灯亮起时,清水泵开始工作。调整好水量压力。

  Turn on the switch of clear water pump after submersible pump starting normally, press down the green button in the light of directions when green indicator light is lighting up and the clear water pump will start to operation when red indicator light is lighting up. Properly adjust the water pressure.

- 检查振冲器油位。

  Inspect the soil level of vibrator

- 振冲器正常出水后,开启振冲器开关,绿色指示灯亮起时,按标示按下绿色按钮,红色指示灯亮起,振冲器开始转换启动。转换启动时间是通过时间继电器调整指定的。(4-6s)

  Turn on switch of the vibrator after the vibrator being out of the water normally, press down green button in the light of directions when green indicator light is lighting up and the vibrator will start to transferring initiation when red indicator light is lighting up. Transfer start time is confirmed by adjustment of time relay. (4-6s)

- 振冲器正式启动后,进行空载测试,观察设备是否有异响。

  Make a no-load test after the vibrator starting initiation to observe whether sound of the device is normal or not.

- 测试完毕,旋转控制面板上的转换开关,根据施工要求调整造孔及加密档位,振冲器开始造孔、加密工作。

Rotate change-over switch on control panel after finishing test and adjust pore-forming and encryption gear, the vibrator will start to operation of pore-forming and encryption.

- 根据施工要求及地质情况,通过电流继电器调整造孔电流及加密电流。

Adjust pore-forming current and encryption current by current relay in accordance with construction requirement and geological condition.

- 测试电控柜蜂鸣器,按照标示按下黄色按钮,蜂鸣器黄色灯光闪烁并有报警笛声,蜂鸣器的另一端是信号箱,用线缆连接,蜂鸣器发出信号时,信号箱也同步发出信号,提示吊车操作手振冲器的工作状态。蜂鸣器是通过振冲器在工作中的电流变化工作的。

Press down yellow button in light of direction to test buzzer of electric cabinet, the yellow light of buzzer is twinkling with sound of alarm flute, the other end of buzzer is signal box which being connected by cable, the signal box synchronously is signaling to prompt working status of hand vibrator operated by the crane when the buzzer gave the signal. Operation of the buzzer depends on current changing of the vibrator in working.

- 电工应在工作中时刻注意电压、电流表针是否正常。

The electrician should pay constant attention to whether the indicator of voltmeter and ampere meter is normal.

- 根据不同地质情况,一般振冲器下降速度在 1-2m/min,无论下降速度快慢,振冲器应保持悬垂状态,垂直造孔。

Descent speed of vibrator in general is from 1m/min to 2m/min according to different geological condition, and no matter what the descent speed is, the vibrator should keep hanging state for vertical pore-forming.

- 造孔时当电流值达到电机额定电流值时,应减速或暂停振冲器

下降,或者提升振冲器。待电流下降后再继续操作。

Should reduce speed or stop the vibrator descending temporarily during process of pore-forming when the current reached the rated current, or elevate the vibrator. Operate the vibrator again after the current dropping.

- 当造孔达到设计深度时即可终止,将振冲器提升至地面,提升的速度一般为 2-4m/min。

The operation can be stopped when the depth of hole reached to the depth of design, elevate the vibrator onto the ground and elevation speed usually is 2-4m/min.

- 振冲器在完成制桩后,将振冲器的所有连接螺丝紧固一遍,每次成桩后检查螺丝有无松动。对振冲器每个连接处用螺纹钢或圆钢焊接牢固,每个连接处焊接 2-4 条为好。

Fasten all connected screws of vibrator after finishing installation of stone column and check whether the screw is loosing after piling every time. Each joint of the vibrator is welded firmly by threaded steel or round steel of two to four pieces.

- 每次施工前,对振冲器各部位进行检查,外观是否有开裂变形,保护焊接是否牢固,连接螺丝是否松动,电机、电缆绝缘阻值是否正常,连接线是否破损,振冲器或电机是否渗油,减震器铸胶是否有溢出或开裂。

Check each part of vibrator before construction and confirm whether appearance is cracking and deforming, whether protection welding is fastening, whether connecting screw is loosing, whether insulation resistance of the cable is normal, whether connecting line is damaging, whether the vibrator or electric motor is leaking oil and whether the rubber casting of shock absorber is overflowing or cracking.

- 振冲器及配套机具在每次施工前后都要妥善保管,避免在露天

及含有腐蚀性气体、液体的环境中存放，在运输工作过程中，避免硬物外力撞击及高空坠落。

The vibrator and supporting machines should be keeping properly before and after each construction to avoid open depositing and environment containing corrosive gas and liquid, escaping form striking by external objects and air dropping during the term of delivering.

图 4-3 振冲器制桩图

Picture 4-3 Piling diagram of the vibrator

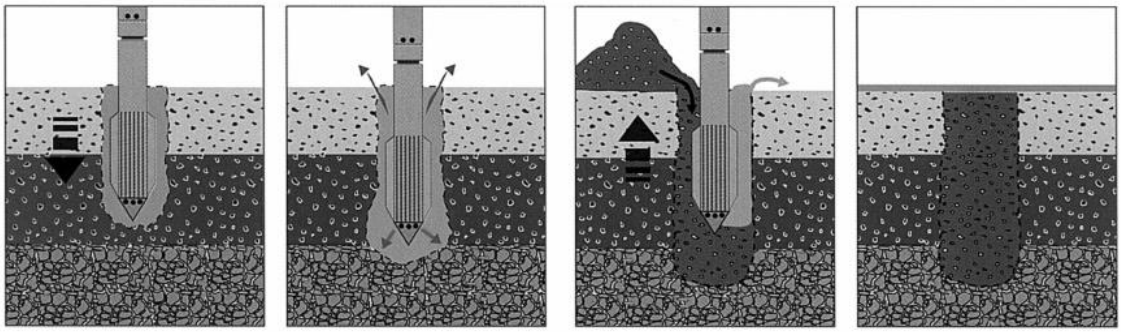

注意 Attention

振冲器工作停止或完成后，应关闭振冲器及各配套设备开关，振冲器深入地层工作时不许中途关闭振冲器电源开关及水泵电源开关。

Should turn off switches of the vibrator and each supporting devices after stopping or finishing the operation, and not allow halfway turning off power switch of the vibrator and water pump when the vibrator worked through into formation.

注意 Attention

振冲器在工作中不得停水,防止泥沙倒灌。振冲器在深地层工作时不得随意停电。电网电压(380V±5%)异常时停止施工。

The vibrator can not be cut off water in working to prevent sediment decanting and can not be arbitrarily power off when working through into formation. The construction should be stopped if network power voltage (380V±5%)is abnormal.

五、振冲器维护与保养及故障排除 Maintenance and failure elimination of the vibrator

1、 维护与保养 Maintenance

振冲器在工作中,工作环境恶劣及自身负荷较大,必须及时维护保养,维护保养的程度直接影响振冲器使用寿命及工作效率。

The vibrator must be maintained in time during operation because of bad working environment and larger owned load, and the degree of maintenance has a direct bearing of service life and working efficiency.

- 振冲器应在本公司指导下焊接加固,其他部位严禁焊接,否则视为自动放弃免费保修期。焊接要求见图 5-1 焊接位置示意图。

  The vibrator should be welded and fastened on the basis of our direction and any other part is strictly prohibited welding, otherwise, as giving up free warranty period automatically. Welding requirement please see following picture 5-1 schematic diagram of welding location

图 5-1 焊接位置示意图

Picture 5-1 Schematic diagram of welding location

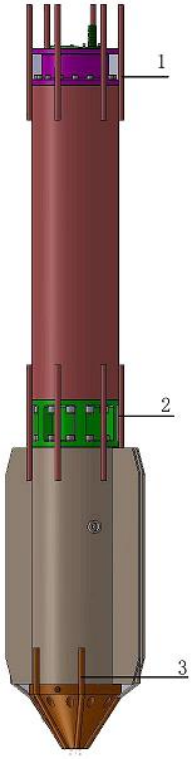

1-电机压盖与减震器 Motor gland and shock absorber

2-连接法兰与机体 connecting flange and the body

3-振头与机体 Vibrator head and the body

连接处可焊接拉筋,6 根以下为宜

The joint can be welded with tie piece and the advisable number is less than six

- 在施工过程中,随时观察振冲器各部位连接螺丝是否有松动,情况出现应及时紧固。焊接部位根据磨损情况及时加固。

  Observe at any time whether connecting screw for each part of vibrator is loosing, and should be fastened timely if is. Welding position is fastened in time on basis of wear status.

- 在施工过程中,应注意振冲器是否有杂音,检查电流表是否有波动,根据情况及时检修处理。振冲器工作状态必须垂直地面,禁止横向振动,避免造成内部损伤。

Should pay attention to if there is the noise in vibrator during the process of construction, check whether ammeter is fluctuating and repair it timely based on the condition if is. Working status of the vibrator must be vertical to the ground and is prohibited horizontal vibration for avoiding internal damage.

- 新设备在投入使用 1000 延米后,应对振冲器进行换油保养,依据技术参数所规定的数量添加润滑油。正常使用每 1 个月工期更换润滑油进行保养,具体更换时间看设备使用运转情况而定。

  Should maintain the vibrator with changing lubricating oil 1000 linear meter after new equipment being put into use and add lubricant according to specified number in technical parameter. Change lubricant for maintenance after operating one month normally and detailed changing time shall depend on operation condition of the device.

- 根据设备使用周期及工作负荷量,一般情况下使用时间在 1 个月左右或者施工进尺 5000 米后对设备定期检修保养,更换易损件。

  In line with life cycle and workload of the device, in general repair and maintain the device regularly after being used about one month or the footage of construction being up to 5000 meters and change wearing parts.

- 机油润滑的振冲器每完成 5000 米需进行换油处理。

  The vibrator should be changed lubricating oil for finishing each 5000 meter.

2、 故障与排除 Failure and elimination

设备故障情况及检查和排除办法请详见表 5-1 常见设备故障及检查和排除

Failure of device and method of checking and elimination please see the table 5-1 common failure and checking and elimination

表 5-1 常见设备故障及检查和排除

Table 5-1 Common failure of device and checking and elimination

序号 No.	设备故障情况 Failure	检查和排除 Checking and elimination
(1)	振冲器不能正常启动 The vibration cannot start normally	检查线路电源是否缺项，检查电源电压，检查振冲器联轴器间隙，检查振冲器和电机轴承是否损坏。（冬季检查润滑油粘稠度，加温处理）。Check whether the line power is missing, check clearance of vibrator coupling and whether the vibrator and motor bearing are damaged (in winter check viscosity of the lubricating oil, warming enhanced)
(2)	振冲器空载电流过大 No-load current of the vibrator is excessive	检查电压，检查润滑油量及粘稠度，检查振冲器和电机轴承是否损坏。Check the voltage, check quantity and viscosity of lubricating oil, check whether the vibrator and motor bearing are damaged
(3)	工作时振冲器有异响 There is abnormal sound of the vibrator in working.	检查轴承及连接部位。 Check the bearing and joint.
(4)	工作时振冲器轴承部分温度上升 the temperature of vibrator bearing in the work is raising.	检查润滑油量，检查轴承。 Check quantity of lubricating oil and bearing
(5)	振冲器运转正常突然停机 The vibrator is running normally and suddenly is closing down	检查电机电缆是否漏电，检查控制线路与保护装置。 Check whether the cable of electric motor is leaking electricity and check control circuit and protection device.
(6)	振冲器整体带电 The vibrator is whole charged	检查漏电保护装置。 Check leakage protection device

注意 Attention

如果在工作中或是刚刚停止运转后不宜立即放油或加油，因为振冲器工作所产生的热量会对腔体有一定的空间膨胀。工作人员应站在油孔的侧面工作，以免螺栓射出、溅出的热油烫伤人员。

It is an ill time to draining or adding oil during operating and immediately after stopping running because the heat generated by the vibrator would have certain space expansion to the cavity. The operator should work by standing in the side of oil hole to prevent from being burned by hot oil which being ejected and spilled from screw.

注意 Attention

维修前，应先将振冲器腔体内的油排放干净，并保证油堵处于开放状态，以防在切割焊接过程中油温过高引起爆燃烫伤人员。

Should drain all the oils in cavity body of vibrator before repairing and ensure that oil chocking is open, in case high-temperature oil deflagrates and burns the operator in process of cutting welding.

六、电控柜使用说明 Instruction of the electric cabinet

1、概述 Overview

北京振冲工程机械有限公司同时生产与本公司振冲器设备配套使用的电控柜,为了更好的发挥振冲器性能,建议配套使用本公司生产的电控柜。

Beijing Vibroflotation Engineering machinery Co., Ltd has also produced the electric cabinet matched with the vibrator device of our company, and thus we suggest using the electric cabinet produced by our company as well for the purpose of better playing the performance of vibrator.

本公司生产的电控柜采用目前最先进的 TN-S 供电系统配置,性能安全可靠,适用地域广。

The electric cabinet of our company adopts for the most advanced TN-S power supply system configuration, its performance is safe and reliable and can be used widely.

2、 电控柜正常工作条件 Normal operating condition of the electric cabinet

- 周围空气温度不高于+50℃,不低于-20℃;

  Ambient air temperature is no more than +50 ℃and no less than -20℃

- 使用地点的海拔不超过 2500 米;

  The elevation of using location is no more than 2500 meters.

- 湿度：环境最高温度为 50 度时，空气的相对湿度不超过 45%，在较低的温度下，可允许有较高的湿度，但如果湿度达到 80%以上时，建议停止施工作业；

  Temperature: relative humidity of air is no more than 45% when the highest ambient temperature is 50℃, allow a higher humidity but suggest stopping construction if the humidity more than 80%.

- 电控柜应安装在无显著摇动、冲击振动和没有雨雪袭击的地方，应保持电控柜通风、干燥；

  The electric cabinet should be installed in location of no significant shaking, shocking and vibration and no rain and snow attacking.

- 电控柜安装地点应无爆炸危险介质，且介质中无足以腐蚀金属和破坏绝缘的气体、尘埃。

  There is no explosion danger medium in installation location of electric cabinet and there is no gas and dust enough to corrode metal and destroy insulation in the medium.

3、 电控柜结构与特点 Structure and feature of the electric cabinet

- 电控柜由柜体、边框、元件板及通风孔电器元件装配组成。柜体采用冷轧钢板弯制焊接，表面喷塑处理，经久耐用。

  The electric cabinet is composed of cabinet, frame, component board and venting electrical components, the cabinet uses bending welding of cold rolled steel plate and plastic-sprayed surface processing and is durable.

- 电控柜主体采用母排分配方式各路供电,各电路控制安装漏电断路器以防漏电造成人身安全。

  The main body of electric cabinet introduces each power supply of bus distribution, each circuit install leakage circuit breaker to prevent leakage and causing personal safety.

- 电控柜配置 380V、220V 照明输出单相、三相插座供临时用电使用。

  The electric cabinet is allocated single-phase and three-phase socket of 380V and 220V lighting output for temporary electricity use.

- 电控柜电源进线、功能输出、中性线母排(N)、接地母排(PE)均有明显标识。

  There is significant marking of power input line in electric cabinet, function output, neutral line bus (N) and grounding bus (PE).

- 电控柜内各电器元件均符合国家 3C 认证标准。

  All electrical components in electric cabinet conform to national 3C authentication standard.

- 可同时选装我公司生产的振冲自动监控记录仪。

  Meanwhile you can choose to installing automatic monitoring recorder of vibration and shocking produced by our company.

4、 电控柜使用方法 Using method of the electric cabinet

- 电控柜操作人员应具有电工职业资格证。

  The operator of electric cabinet should have electrician vocational certificate.

- 电控柜输入交流电源电压 380V±5%,频率 50Hz,电控柜安装完

毕，检查电器元件固定螺栓是否有松动，输入电源电压是否相符，保护接地是否良好。送电前检查各路漏电断路器是否在断开状态，送电后检查各路漏电断路器试验按钮是否正常工作。

Input 380±5%AC supply voltage and 50HZ frequency and finish the installation of electric cabinet, check whether fixed bolt of electrical components is loosing, whether input power voltage is correct and whether protective grounding is good. Check whether leakage circuit breaker of each circuit is in the off state before powering on and after powering on check whether test buttons on leakage circuit breaker of each circuit work normally.

注意 Attention

使用电控柜时必须保护接地。 Must be protective grounding when using the electric cabinet

- 振冲器可采用自耦降压启动或软启动方式，以减少对供电电网波动。清水泵采用直接启动方式，潜水泵采用手动或自动上水系统。

The vibrator can employ the way of self-coupling decompression starting or soft starting so as to reduce fluctuation to power supply network. Clear water pump uses direct starting way and submersible pump uses manual or automatic filling system.

注意 Attention

使用发电机电源时应注意功率及频率匹配。

You should pay attention to power and frequency matching when using power supply of

generator.

- 振冲器工作前必须先启动清水泵,然后再启动振冲器。

  Should start the clear water pump before the vibrator working, and then start the vibrator.

- 电控柜可应用于各种施工地层,视地层情况,依据施工要求可调整静态电流继电器和时间继电器相应数值。

  The electric cabinet can be applied to various construction formations and may adjust related values of static current relay and time relay based on formation status and according to the construction condition.

- 电控柜对各种施工设备设有保护措施,包括过热保护、过载保护及报警装置。

  The electric cabinet sets protection measures to all kinds of construction devices like overheating protection, overloading protection and alarm device.

注意 Attention

应根据振冲器及配套设备的使用要求调整电控柜内各电器元件数值。 You should adjust values of each electrical component in accordance with using equipment of the vibrator and supporting devices.

注意 Attention

电控柜出现故障必须有专业人员维修,可与我公司客服部联系。

The electric cabinet must be repaired by the professional if failure and can contact customer service department of our company.

图 6-1 电控柜面板控制图 Picture 6-1 Controlling diagram of electric cabinet panel

图 6-2 电控柜端子输出排列图

Picture 6-2 Pareto diagram of electric cabinet terminal output

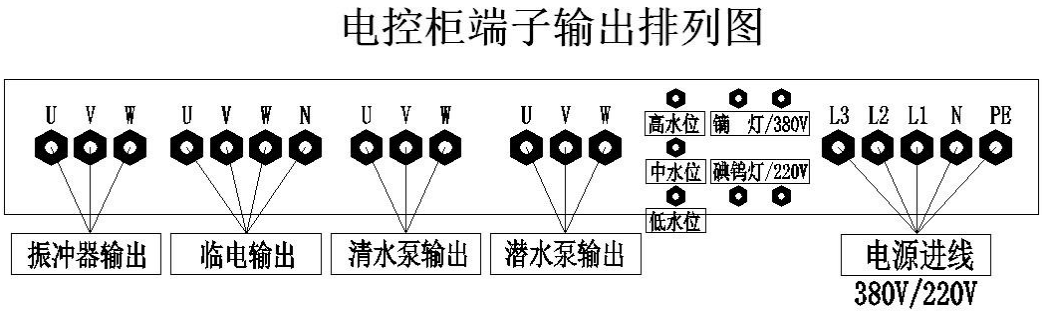

七、安全注意事项 Notes for safety

1、安全需知 Safety instruction

- 培养安全工作习惯,预防事故发生,减少事故发生的机率。

  Develop safe working habit to prevent the accident occuring and reduce the chance of accident occuring.

- 操作设备的过程中,很多事故的发生都是由于我们忽略了基本的安全检查或违反操作规程操作,一般情况下,通过及时地认识到潜在的危险源,就可以避免事故的发生。

  Occuring of many accidents owns to ignore basic safety inspection or break operation regulation during the process of device operating. In general we can avoid accident occuring through realizing potential source of danger in time.

- 不正确的启动和操作设备是危险的,会导致很严重的损失。

  Starting and operating the device incorrectly both are dangerous which will result in serious damage.

- 我们为国外客户提供的产品,也有相应的说明书版本。

  There is relevant instruction edition being attached with the product provided for foreign customer.

- 最基本的安全需知,已经在说明书中明示,操作人员必须严格遵守,这些要求与国际和国内的法律、法规无关。

  The basic safety instruction has been indicated in the instruction, which must be strictly abide by operator and these requirements have nothing to do with international and national laws and regulations.

- 需要的时候,用户必须补充与当地环境相关的规定和要求。这些规定和要求要以书面的形式表现出来。适合设备程序和规定方面的警示语要在危险源上标识出来,以便及时提醒操作人员。

  The user must supplement regulations and requirement relevant to local environment if required. These regulations and requirements should be presented by written. Warning signs being fit for device program and regulation must be indicated on the source of danger in order to remind the operator timely.

- 预见到每一个潜在的危险源是不可能的,如果有一特殊规程没有在说明书中列示,操作者也必须确认其本人或者其他人不存在安全隐患。

  It is impossible to foresee each potential danger source; the operator must confirm no potential risk on himself or others if any special regulation was not indicated in the instruction.

2、设备操作 Device operation

2.1 设备操作人员要求 The requirement for device operator

只有以下满足要求的人员可以操作或保养本机。

Only the person meets the following requirements can operate or maintain this machine

- 年龄在 18 岁或以上者。The age is or above 18 years old.
- 身体和精神状况适合者。

  Physical and mental conditions both are suitable for operation this machine.

- 接受过操作或保养培训,并证明他们能够按照要求完成工作者。

The person accepted operation or maintenance training and ensure themselves can finishing the operation according to the requirement.

- 有完成任务的能力和有责任心的人。

  The person is capable of completing the task as well as is responsible for the task.

- 手持有操作和保养手册,同时能够懂得手册内容。

  The person owns the operation and maintenance manual, meanwhile can understand the content of manual.

注意 Attention

在工作间歇或使用后,必须关闭设备,并确认设备不能移动,油、水压力设备关闭。

Must turn off the device and confirm that the device not being moved and oil and water pressure device being turned off during the break time or after using,

2.2 现场指挥人员 Commander in construction site

- 施工现场必须有一名现场指挥人员,只有可靠的人员才能被任命为现场指挥人员,他们负责做现场监察工作,并且他们应该非常清晰地看到自己的责任。

  There is one commander being required in the construction site and only the person who is reliable can be appointed. They are responsible for monitoring and should know their responsibility clearly.

- 手语和口语要确定操作人员和现场指挥人员都可以看懂或者听懂。

  Sign language and oral should be confirmed by the operator and the commander seeing

or listening clearly.

- 现场只能有一名现场指挥人员。

  There is only one commander in the construction site.

- 现场指挥人员要容易辨识,例如,他们可以穿有特征的衣服。他们应该站在操作人员和现场其他工作人员可以看到的地方。

  The commanders should be easy to recognize, for example, they can wear characteristic clothes and they should stand in the place where can be seen by the operator and other staff in the construction site.

- 现场指挥人员在指挥过程中,不应该再有其他方面的工作安排,以便于他们专心指挥。

  The commanders should not be arranged for other works during the process of commanding, so that they can concentrate on commanding.

2.3 危险区 Dangerous area

- 现场工作人员不能在设备危险区内停留。危险区域指的是那些在设备周围,容易撞伤人或者高空可能发生坠物的地方。

  The staff in the construction site will not being allowed to stay in the dangerous area where is easy to knock and hurt the people or is possible for air dropping objects surrounding the device.

- 操作人员在运行设备时,一定要确认没有人在危险区域区。

  The operator must confirm nobody in the dangerous area when operating the device.

- 在看到任何人面临危险时,操作人员必须给予信号。

  The operator must give the signal if they found someone in dangerous

- 在有噪声的地方,听不到信号,操作人员必须用通用的手语。

The operator must use the common sign language because of not hearing the signal in the noise place.

- 当有人在危险区域内,但是听不到也看不到信号时,操作人员必须停止运行设备。

  The operator must stop running device when somebody in the dangerous area and cannot hear and see any signal.

2.4 保养工作 Maintenance

- 配件需要更换时,出于安全的考虑,请选用原厂产品。

  Please select the supporting components of original factory when needed to change for the sake of safety.

- 必须确认没有油渗漏地下。

  Must confirm that no oil leakage into the ground.

- 任何时候在现场存有粘合剂,以备不时之需。

  There is adhesive in the construction site anytime for use when necessary.

- 出于环境保护的考虑,选择能够生物分解的油品。

  Choose the oil can be biological decomposition for the sake of environment protection.

八、运输安全原则 Safety principle of transportation

- 不管是在颠簸的路面上还是在施工现场,所有运输的设备或附件必须在运输过程中固定、捆扎牢固,以防在运输过程中可能的滑移、跌落或使用运输车辆出现倾翻。

  All shipped devices or accessory must be fixed and fastened to prevent possible slide, dropping and careen of shipping vehicle during the process of transportation in spite of in the rough road or in the construction site

- 各个侧面和运输车辆的托板锁紧装置和安全防护装置要确认在正确状态,拉紧链必须正确可靠。

  Each side and plate locking device of shipping vehicle and safety protection device should be confirmed in normal condition and the tension chain must be correct and reliable.

- 运输车辆发出前一定要认真检查。

  The shipping vehicle must be checked seriously before leaving.

- 严禁运输车辆上坐人。

  Not allow anybody except the driver on the shipping vehicle.

- 如果设备在斜坡上装卸,在靠近斜坡前运输车辆的托板必须放下,可是,拨掉托板锁栓前必须确定没有人员会受到影响。

  The plate of shipping vehicle must be put down before closing to the slope if the device was unloaded in the slope, however, it is confirmed that nobody being influenced before pulling up locking clasp of the plate.

- 运输车辆的侧板不能作为装货时的搭桥,如果使用,必须确定

不会滑移。

Site plate of shipping vehicle cannot be used as bridging of loading goods and must confirm that not sliding if being used.

- 当使用吊车装卸设备时,一定要确保捆扎物、吊具及所有悬挂部分安全有效。

  It should be confirmed the safety and effectiveness of the packing objects, lifting appliance and all handing parts when loading and unloading the devices by using the crane.

- 设备在不使用的情况下,要远离交通枢纽,以防止被卷入不必要的麻烦或事故里。

  The device must away from traffic hinge when not being used to prevent from being involved in unnecessary trouble or accident.

- 设备要有警示标识,例如警告用的三角架、隔离带、警示灯。

  Warning marks should be indicated on device like tripod, isolation strip and caution light for warning.

注意 Attention

货物吊起必须保证绳保持垂直状态,以防意外事故发生。如果货物有摆动,立即把货物放下,再次调整吊起点,以保证吊绳垂直。

Must ensure the rope keeps vertical status when lifting the goods to avoid accident occuring. Put down the goods immediately the goods swing and adjust lifting point again to guarantee the rope being vertical.

注意 Attention

任何时候都要保证刀、切削轮、管线正确存放。

At any time should make sure that the knife, cutting wheel and line pipe are stored properly.

九、质量保证 Quality guarantee

所有用户购买、使用本公司提供的产品都视为了解同意本条款；

All users who purchase and use the product of our company are regarded as understanding and acceptance of this term.

1、 产品品质及保修内容 Quality and warranty content of the product

- 本公司提供完整的、可以使用的产品。

  Our company offer complete and usable product.

- 本公司所提供的产品出厂后一个月内或 5000 延米工程量内以自身原因出现的故障包修。

  We guarantee for repairing the product provided by our company within one month after shipping or the failure caused by own reason below 5000 linear meters.

- 本公司对产品提供售后服务。

  Our company provide the product with after-sales service.

2、 产品保修范围 Warranty scope

由于产品的设计、材质、制造、装配质量的原因引起的设备损坏或故障。

Device damages or failures caused by product design, material, production and assembly.

（由以下原因引起的故障不在产品保修范围内）

（The failures caused by following reasons are not in the scope of warranty）

- 不按《使用手册》规定的内容操作、保养、维修引起的故障。

Failures caused by operating, maintaining and repairing not according to the content specified in instruction manual.

- 未经本公司授权, 自行修理, 改装所引起的故障。

  Failures caused by repairing itself and refitting without authorization of our company.

- 由于使用、拆装、搬运、保管不当所引起的故障。

  Failures caused by improper usage, dismounting, handling and safekeeping.

- 由于火灾、盐蚀、气体腐蚀、地震、风暴、洪水、雷电、电压异常等人为、自然不可抗力的原因所导致的问题和损失。

  Problems and losses caused by human and natural force majeure such as fire, salt corrosion, gas corrosion, earthquake, windstorm, flood, thunder and abnormal voltage and so on.

- 超出规定的保修期或工作量。

  Out of the prescribed warranty period or exceed working capacity.

3、 权利及免除责任事宜 Rights and issues exempted from liability

- 产品在保修期内本公司提供免费维修,超出保修期本公司将收取合理的维修费用。

  Our company guarantees for repairing the product in period of warranty and we shall collect reasonable maintenance charge for the product out of warranty scope.

- 保修服务范围仅限于出现故障的设备,本公司不承担因该设备故障给您带来的任何直接或间接损失的责任,如国家法律有明确规定的,本公司将遵照国家法律执行。

  The warranty service scope is restricted to the device broke down and our company is not responsible for any direct or indirect losses caused by the failure equipment, moreover, we will abide by national law if there is specific provision in national law.